FEM of Tires on Snow

S. Shoop

Tire Society Conference, September 2004

US Army Corps
of Engineers

Cold Regions Research and Engineering Laboratory
72 Lyme Road, Hanover, NH

CRREL

Cold Regions Research & Engineering Laboratory

Advance and apply cold regions science and engineering providing all-season solutions for the Army, DoD and the Nation

Objective

Development of a combined tire-terrain model

- **Tire performance**
- **Tire design**
- **Equipment specification**
- **Terrain response (compaction)**

Why we are doing this?

- Properties of snow vary temporally and spatially making it difficult to get repeatable test results on what is seemingly the "same" snow.
- There is little experience with mobility of lightweight vehicles (e.g. robots) on snow.

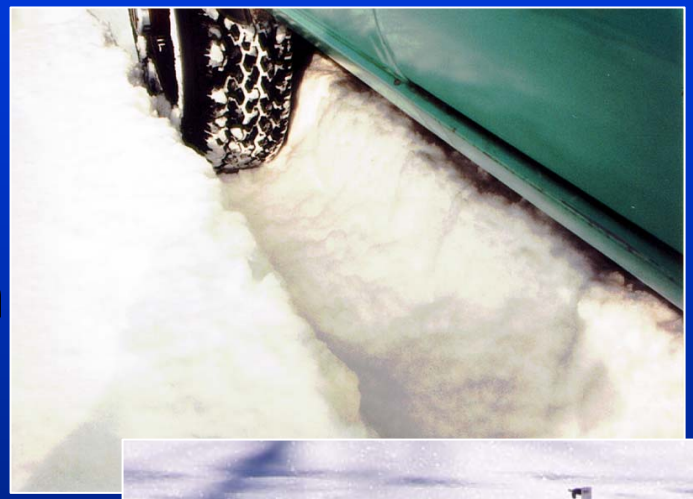

Tasks

Generate Snow Material Model

Evaluate Suitable Tire Models

Combined Tire-Snow Models

Snow Properties

Characteristics

- Density
- Depth
- Temperature
- Wetness
- Hardness or bond strength
- Crystal or grain size
- Crystal or grain shape
- Stratigraphy

Classifications

- Grain shape
- Metamorphism
- Regional characteristics

Snow Metamorphism

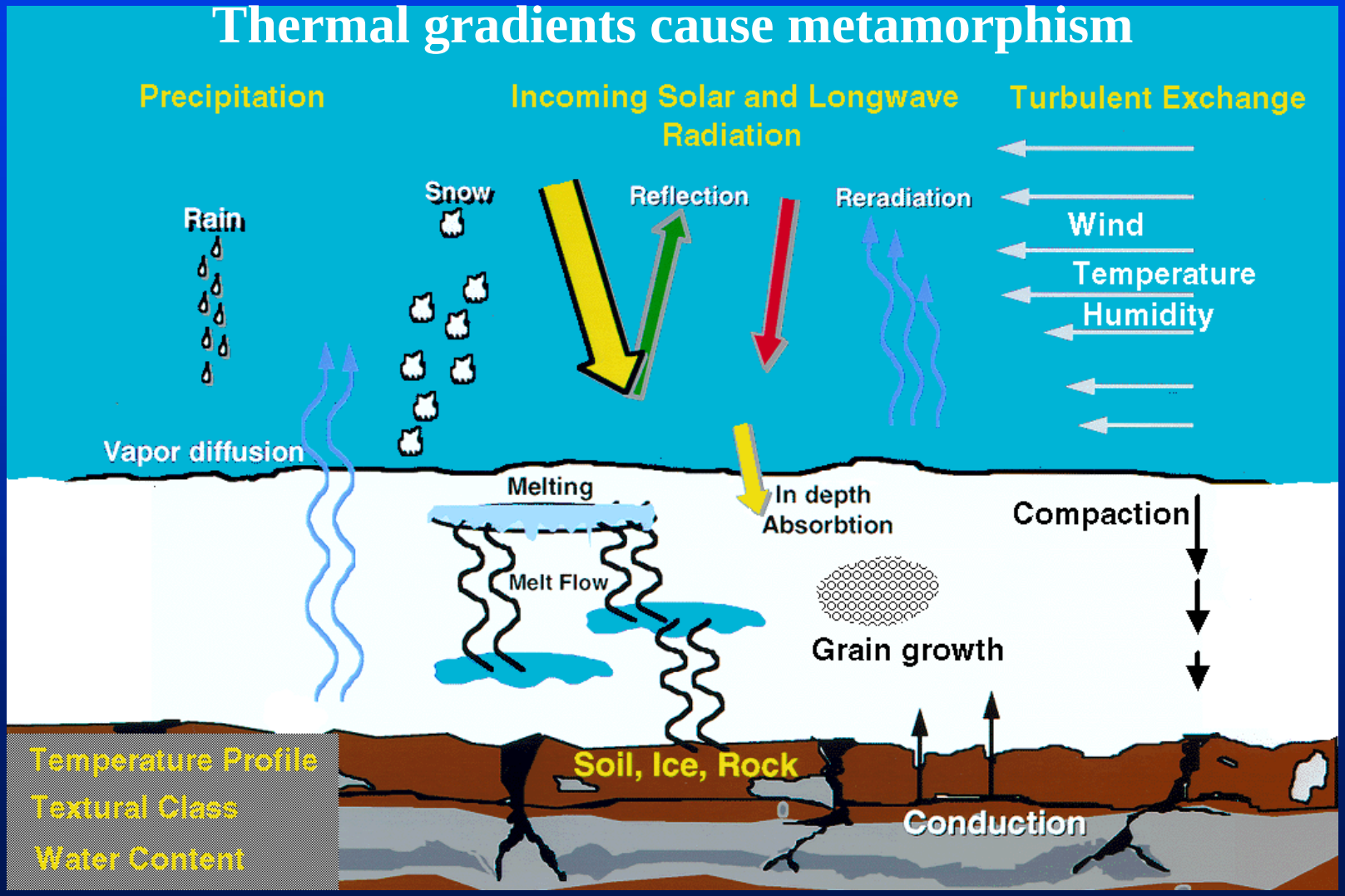

Snow Material Models

Models Considered

Crushable Foam

Cap Drucker-Prager

Component of Cap Plasticity Models

Elastic properties

Yield surface

Plastic flow potential

Hardening rule

Snow Model Validation

Plate Sinkage Tests in the Laboratory and Field

- **Forces**
- **Displacement**
- **Compaction / Density**

Plate Sinkage Test Simulation

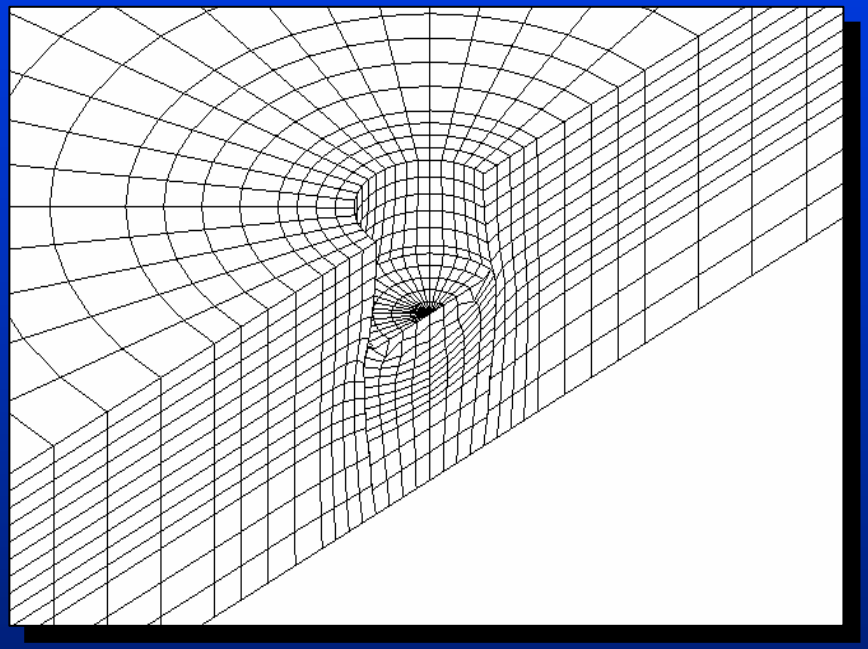

Deformation

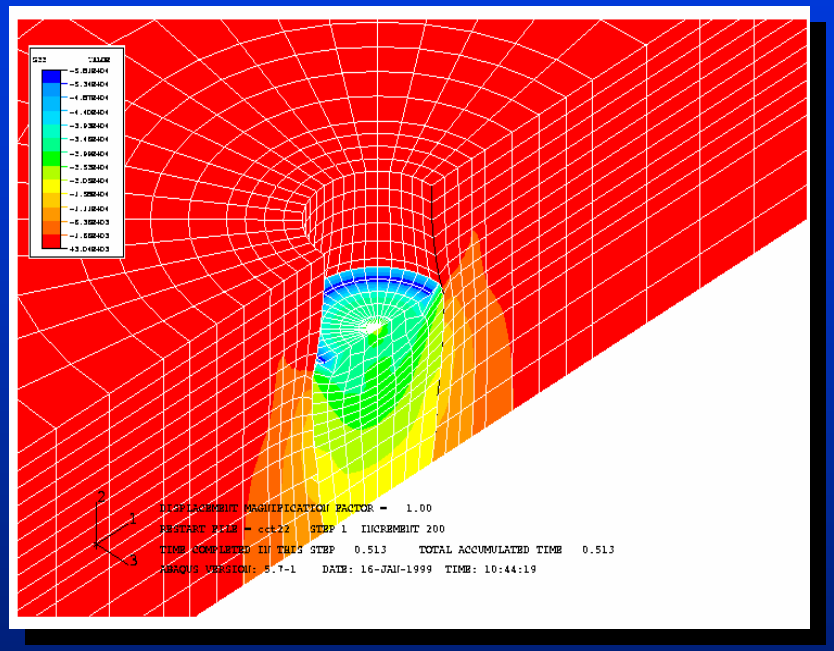

Vertical Stress

Plate Sinkage Forces

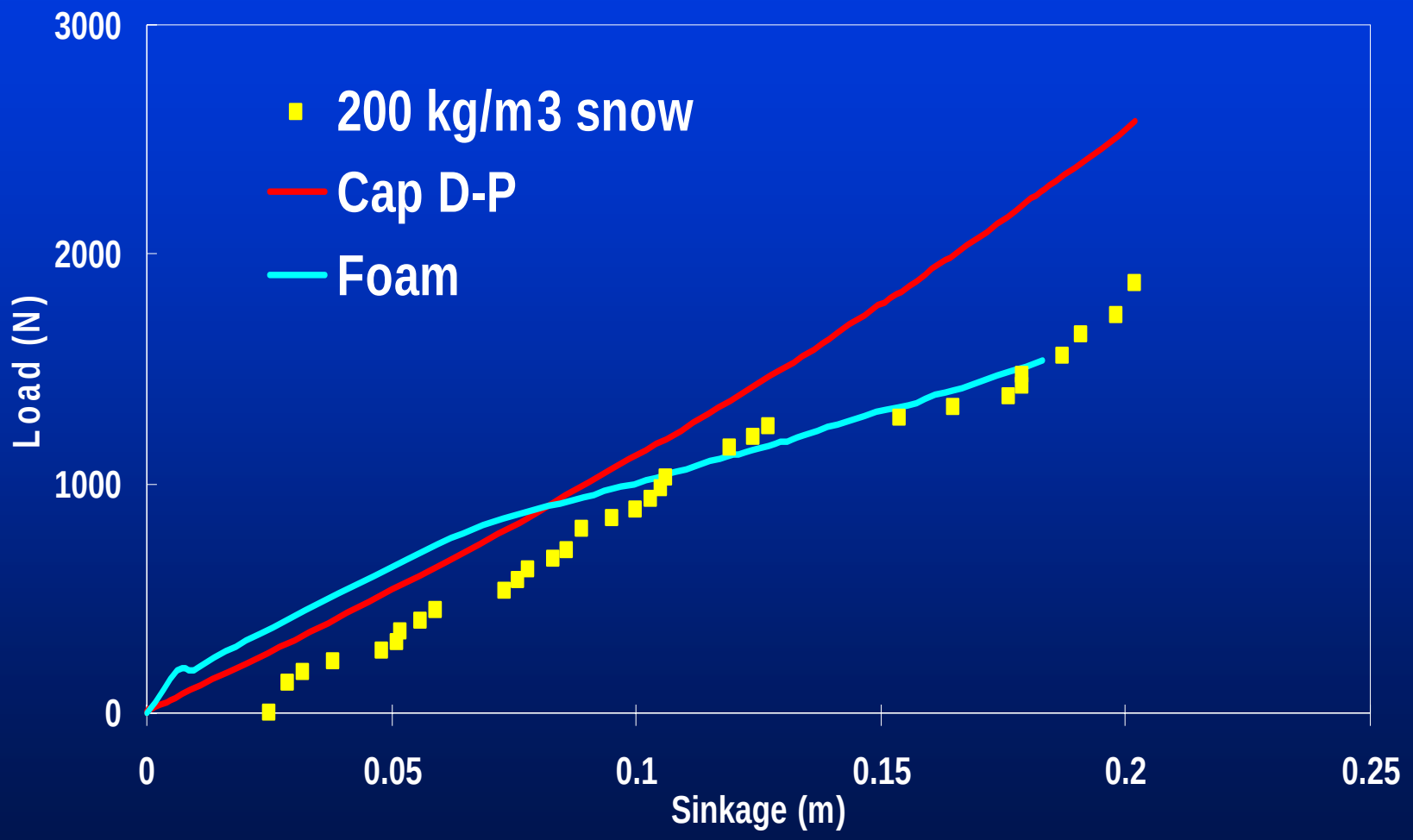

Comparing Measured Density to Model Values

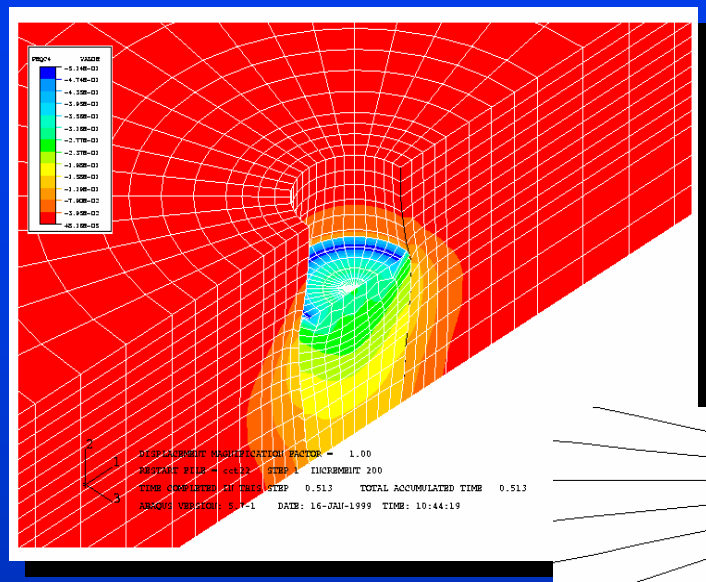

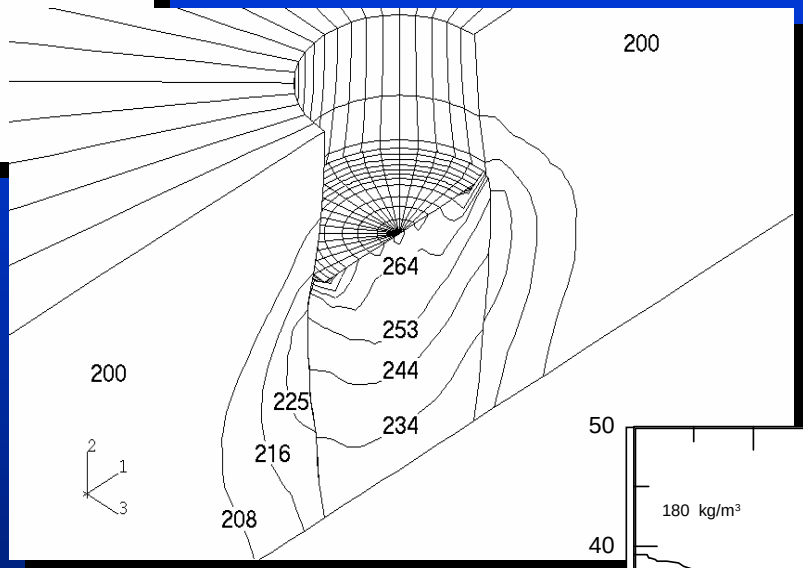

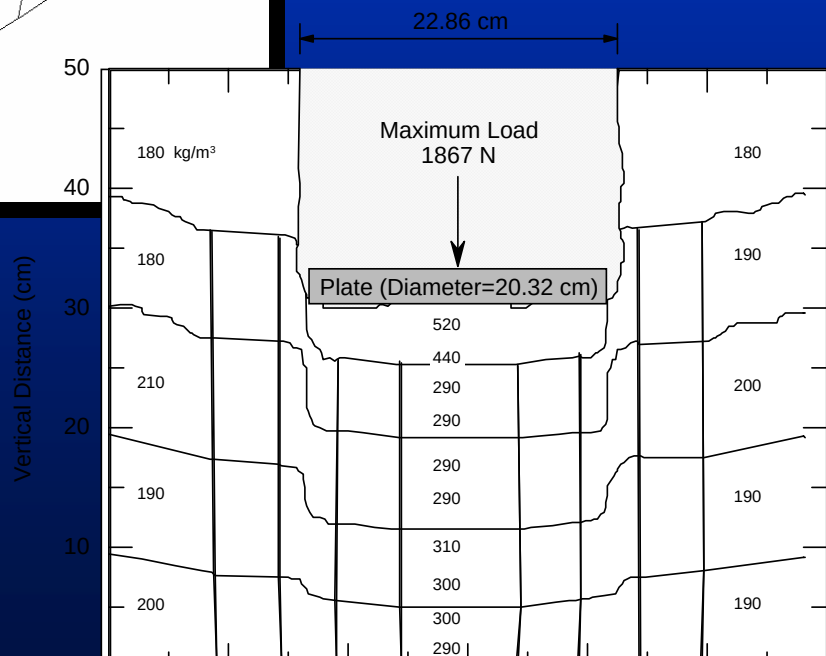

- Plastic Strain
- Model Density
- Measured Density

Tire Models

Rigid Wheel Model

Shell model with smooth tread

Shell model with ribbed tread

Rigid Tire on Snow

- *Analytical rigid surface for wheel & tire*

- *Deformation of tire << snow*

- *Good agreement with measured data*

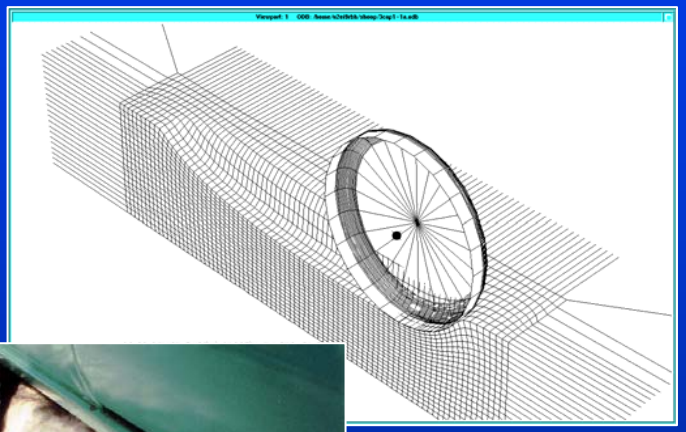

Modal Analysis Tire - Smooth

- Hybrid tread elements
- Free rolling wheel using hub displacement
- 6602 elements (half model)

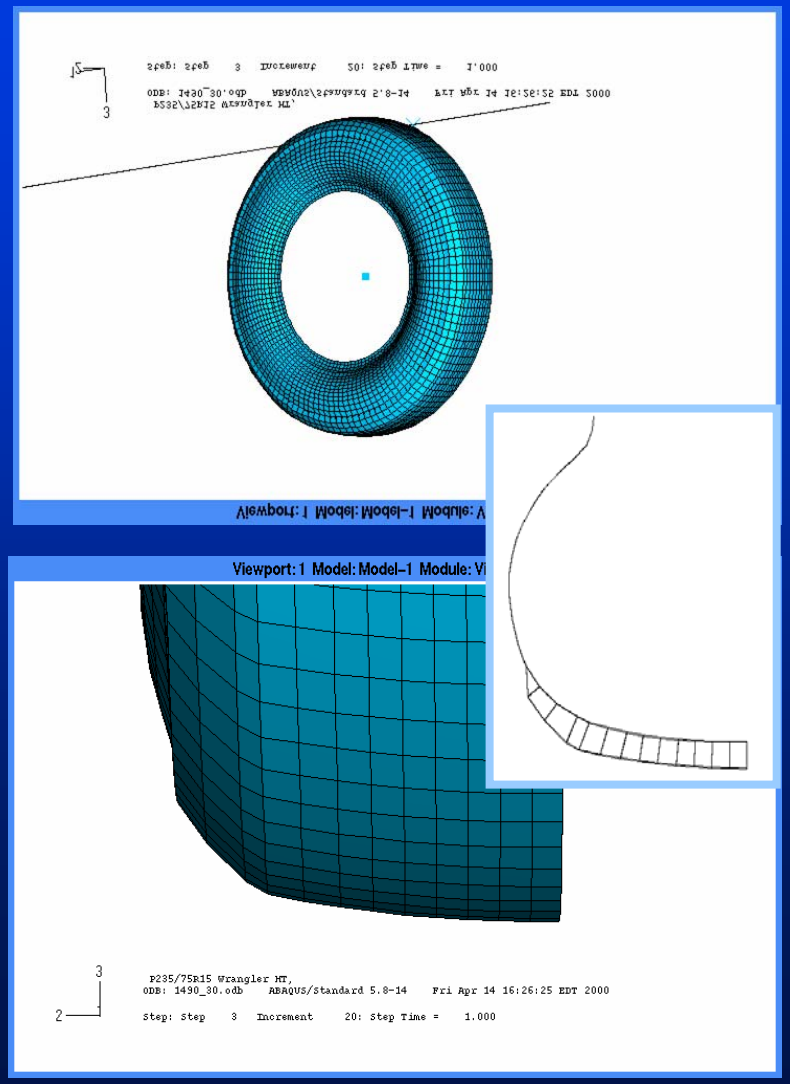

Modal Analysis Tire - Ribbed

- Hybrid tread elements
- 11 step infl. and load w/ varying conv. control
- Four tread grooves
- 13562 elements (half model)

Validation of Contact Parameters

- Deflection
- Contact Area
- Contact Stress Distribution

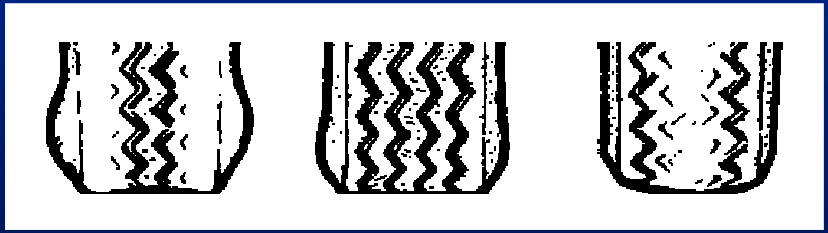

Deflection (LT Tire)

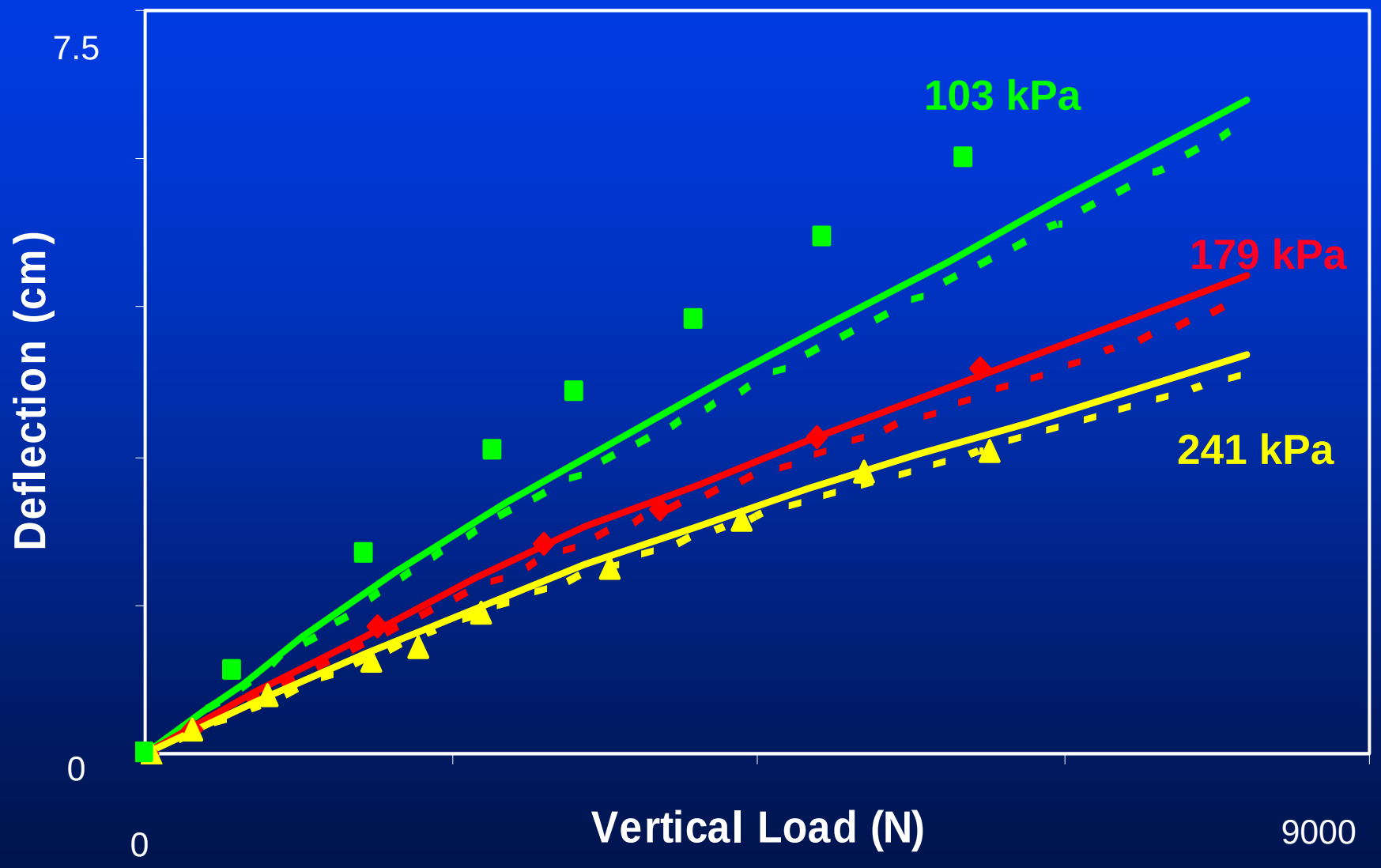

Contact Pressure Distribution

Smooth tread

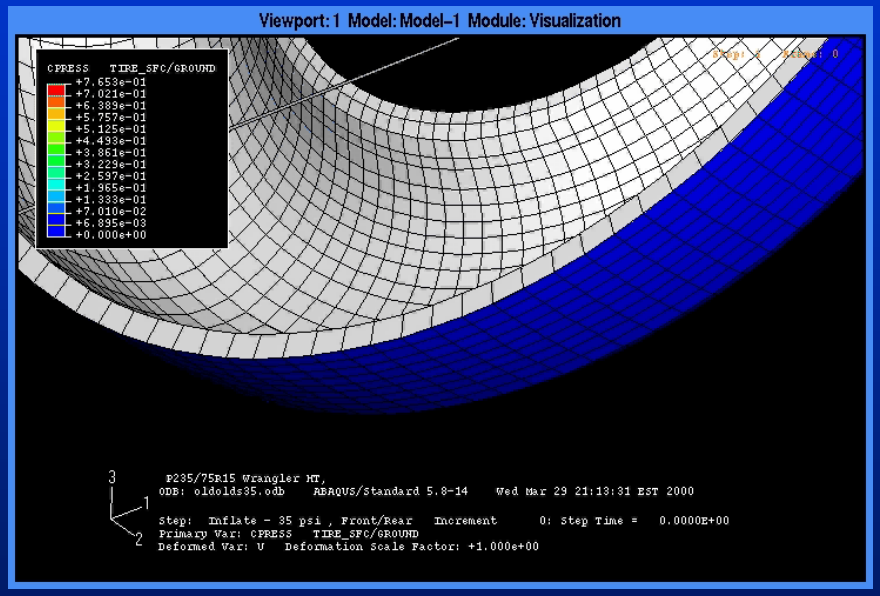

Ribbed tread

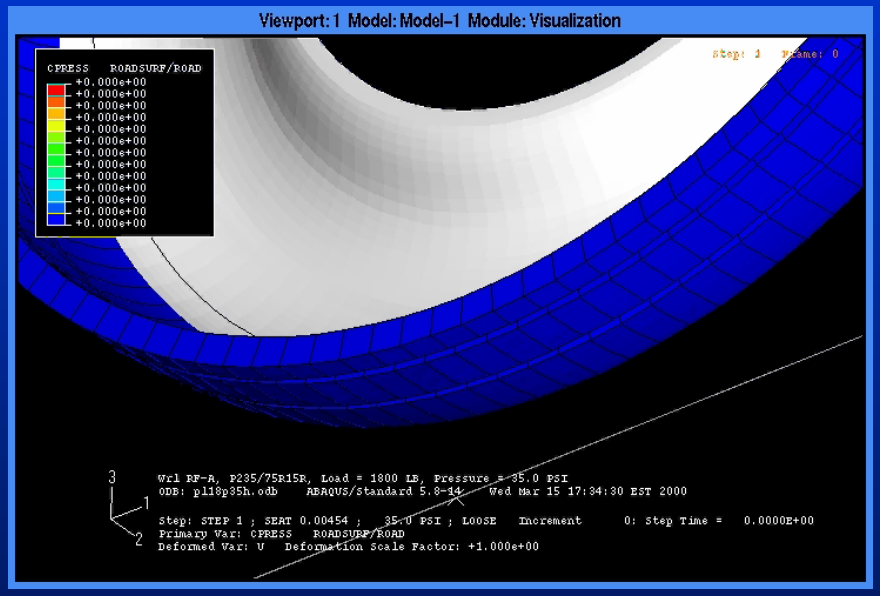

Contact Pressure

Measured

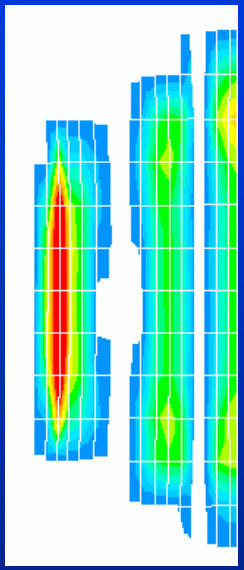

Ribbed Model

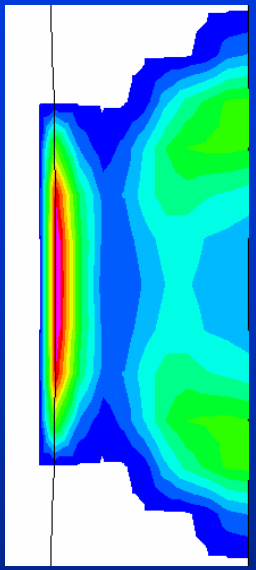

Smooth Model

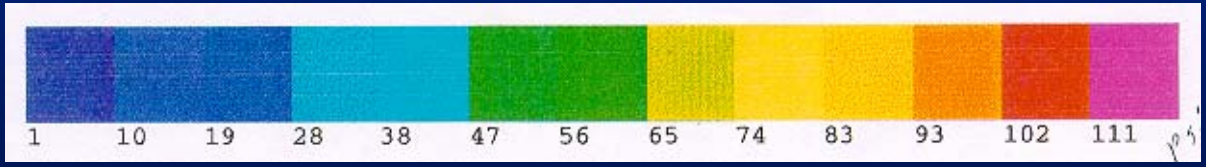

Combined Tire-Snow Model

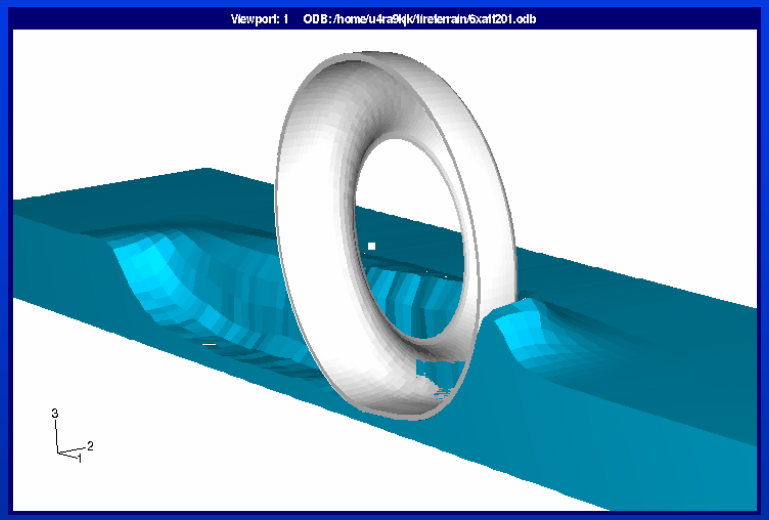

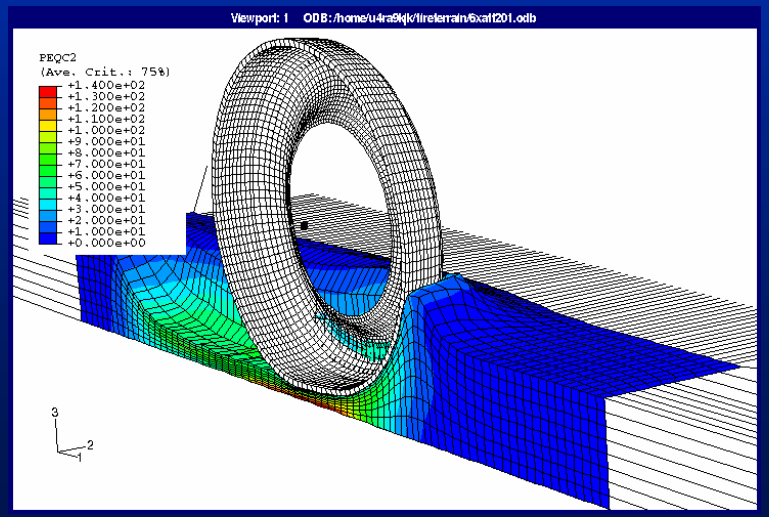

Tire-Snow Model Validation

Compare: **Wheel Forces**
Sinkage
Snow Deformation

Using: **Experimental Measurements**
NATO Reference Mobility Model
Finite Element Model

Vehicle / Tires Used in Experiments

- Jeep Cherokee 235/75 R15

- HMMWV (Hummer)
  37x12.5 R16.5

- HEMMTT (30 ton, off-road 8x8)
  16.00 R20

Jeep Tire on Snow

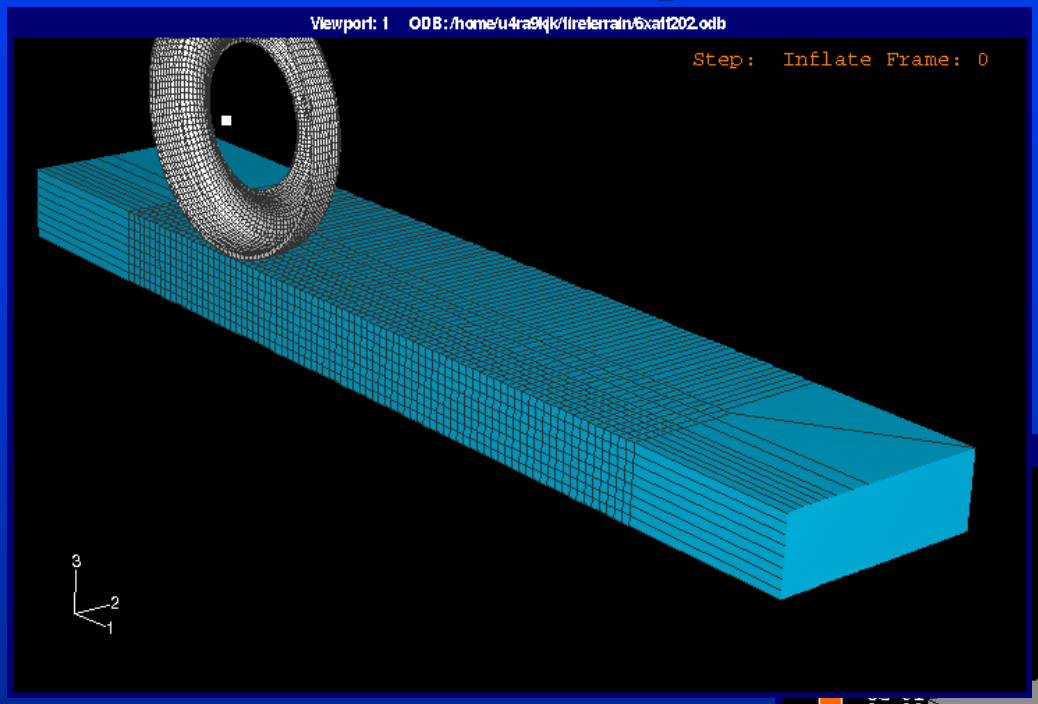

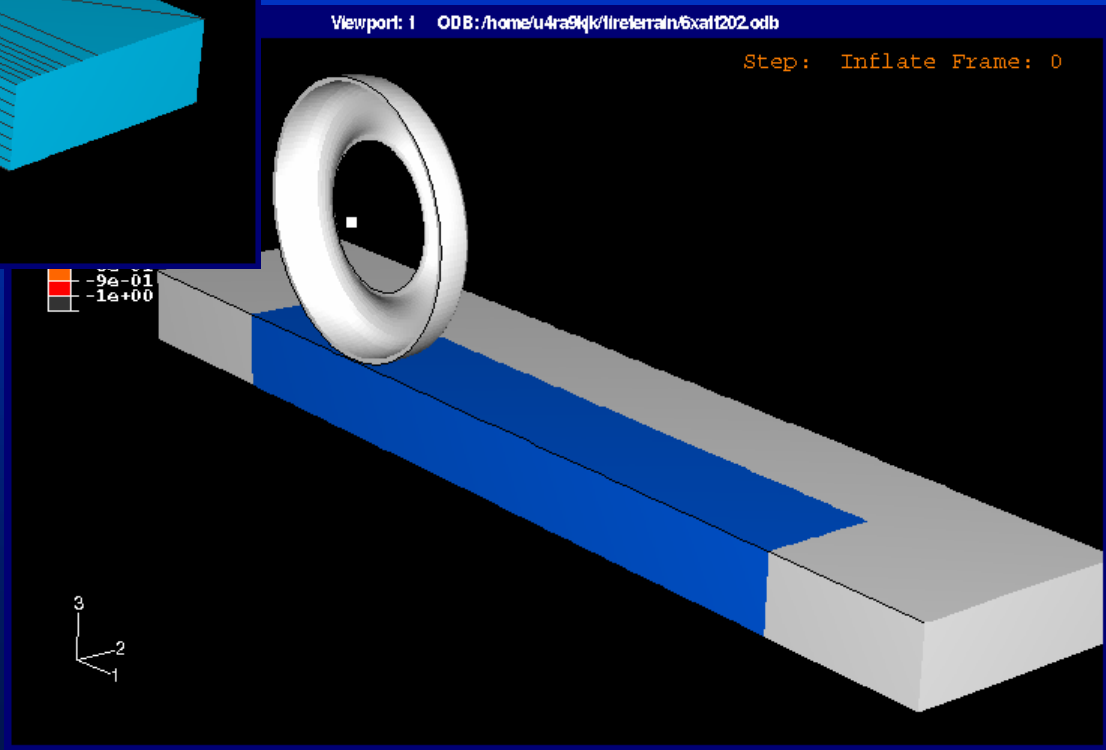

Longitudinal symmetry plane

Jeep Rigid Wheel on Snow (Plastic Strain)

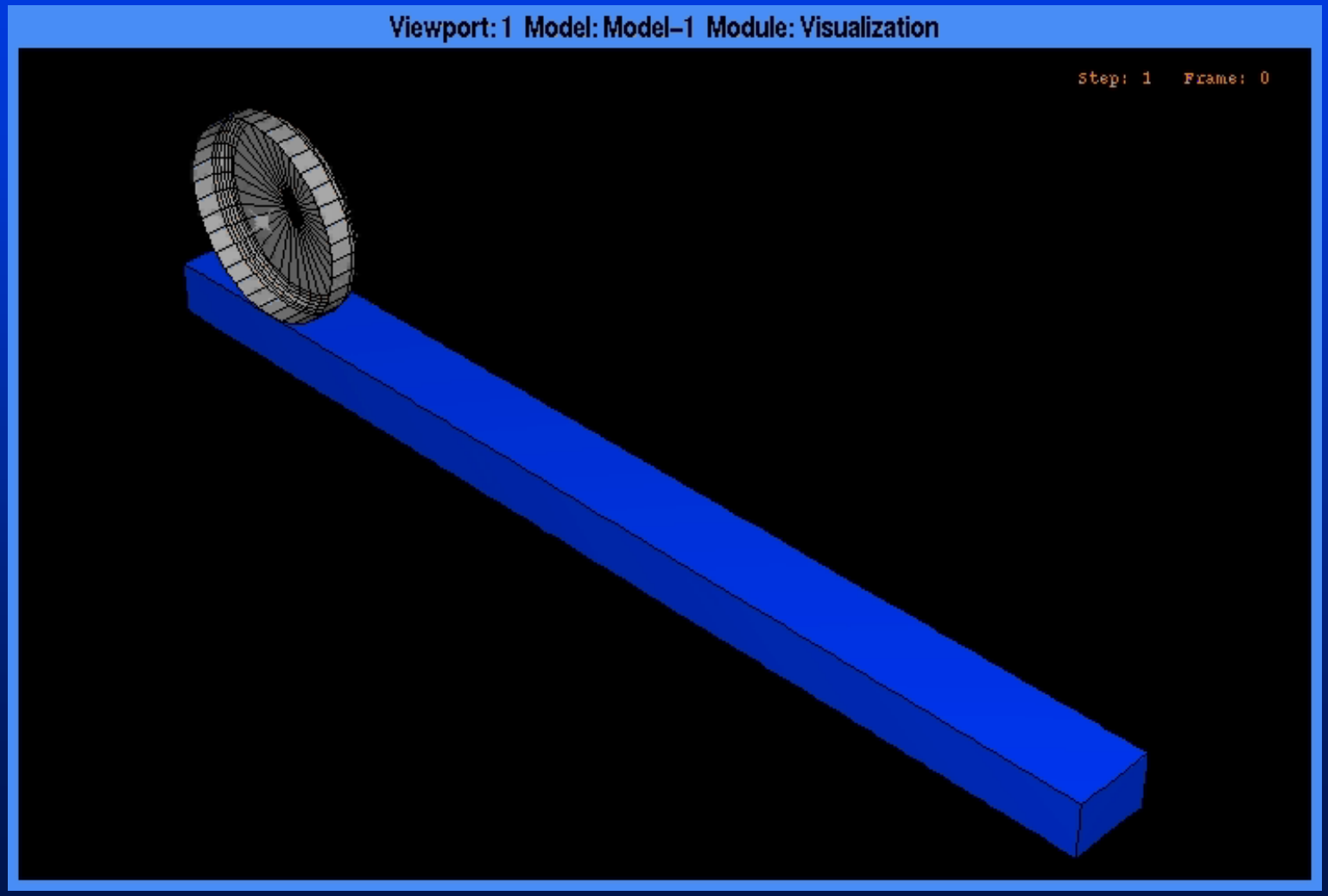

HMMWV Tire

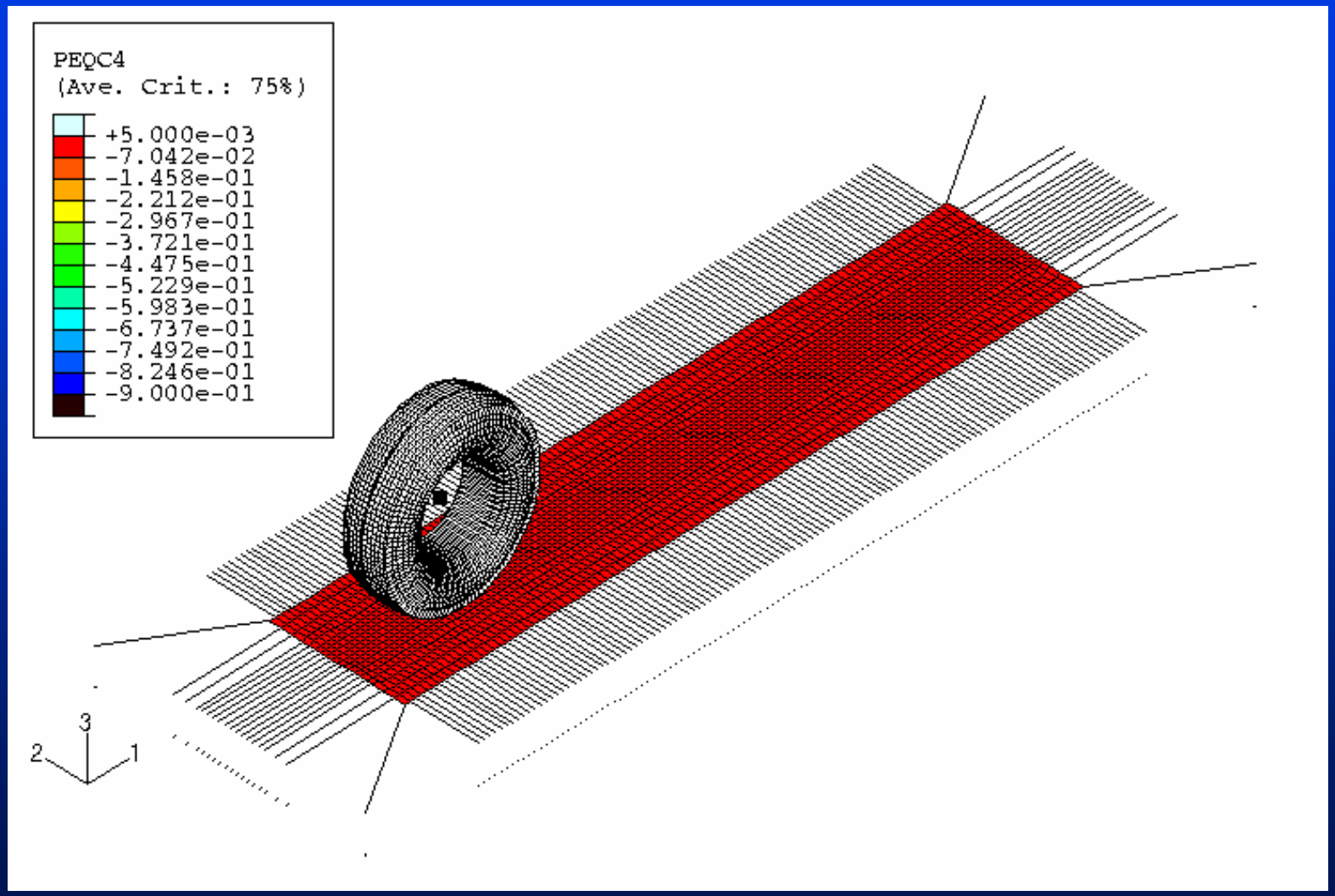
PEQC4
(Ave. Crit.: 75%)
+5.000e-03
-7.042e-02
-1.458e-01
-2.212e-01
-2.967e-01
-3.721e-01
-4.475e-01
-5.229e-01
-5.983e-01
-6.737e-01
-7.492e-01
-8.246e-01
-9.000e-01
3
2
1

HMMWV Tire Contact Patch

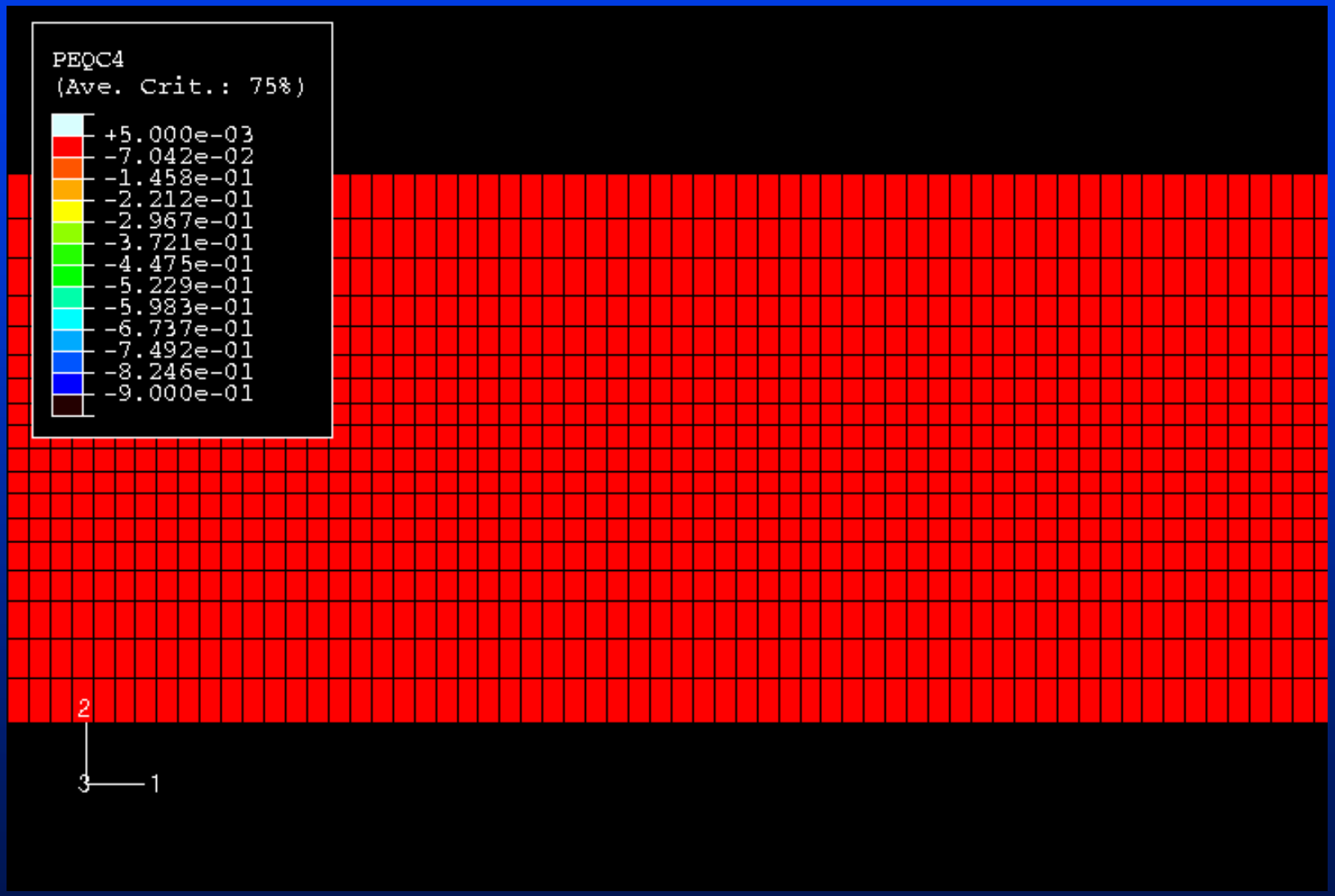

HEMTT Tire in Snow

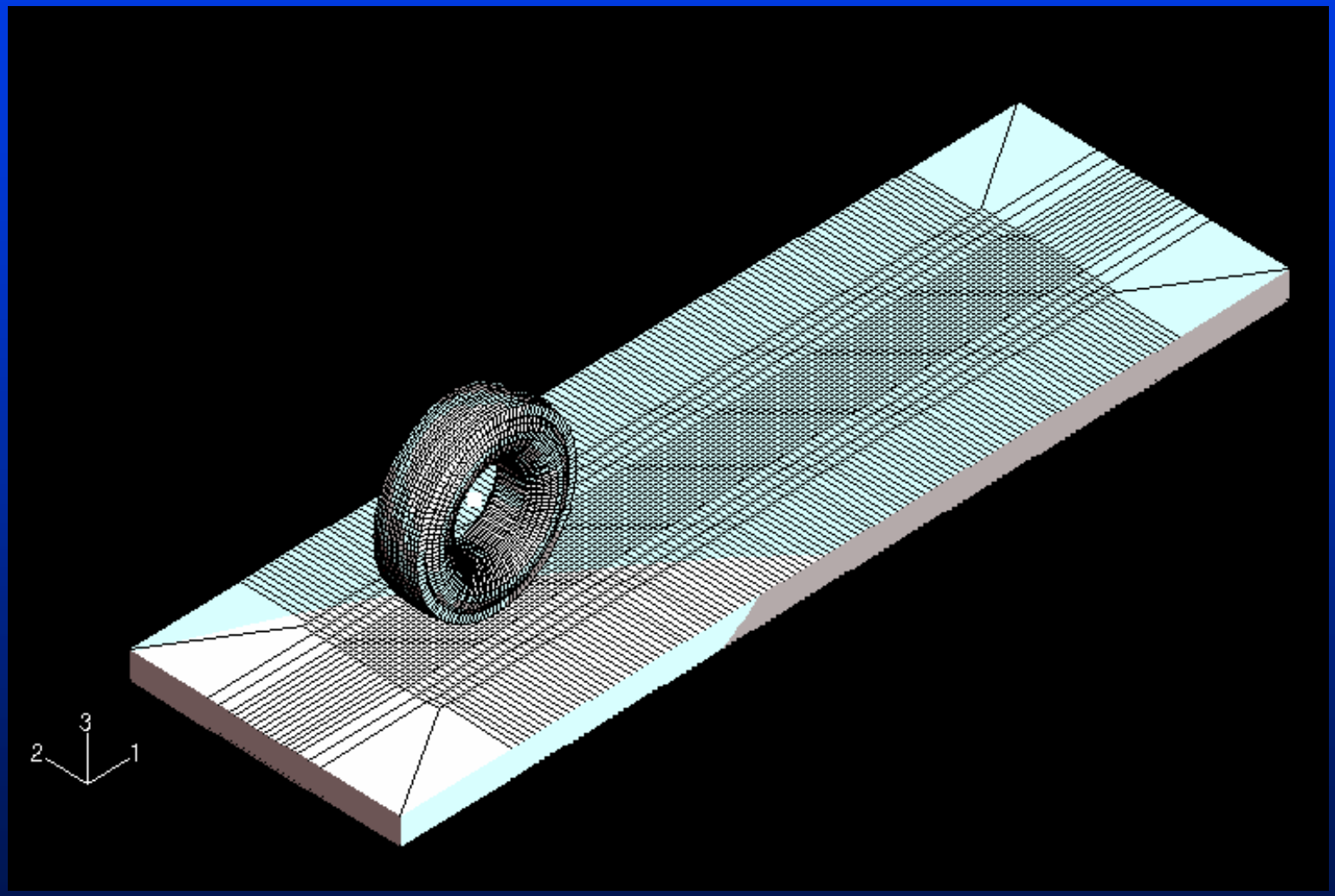

HEMTT Tire in Snow

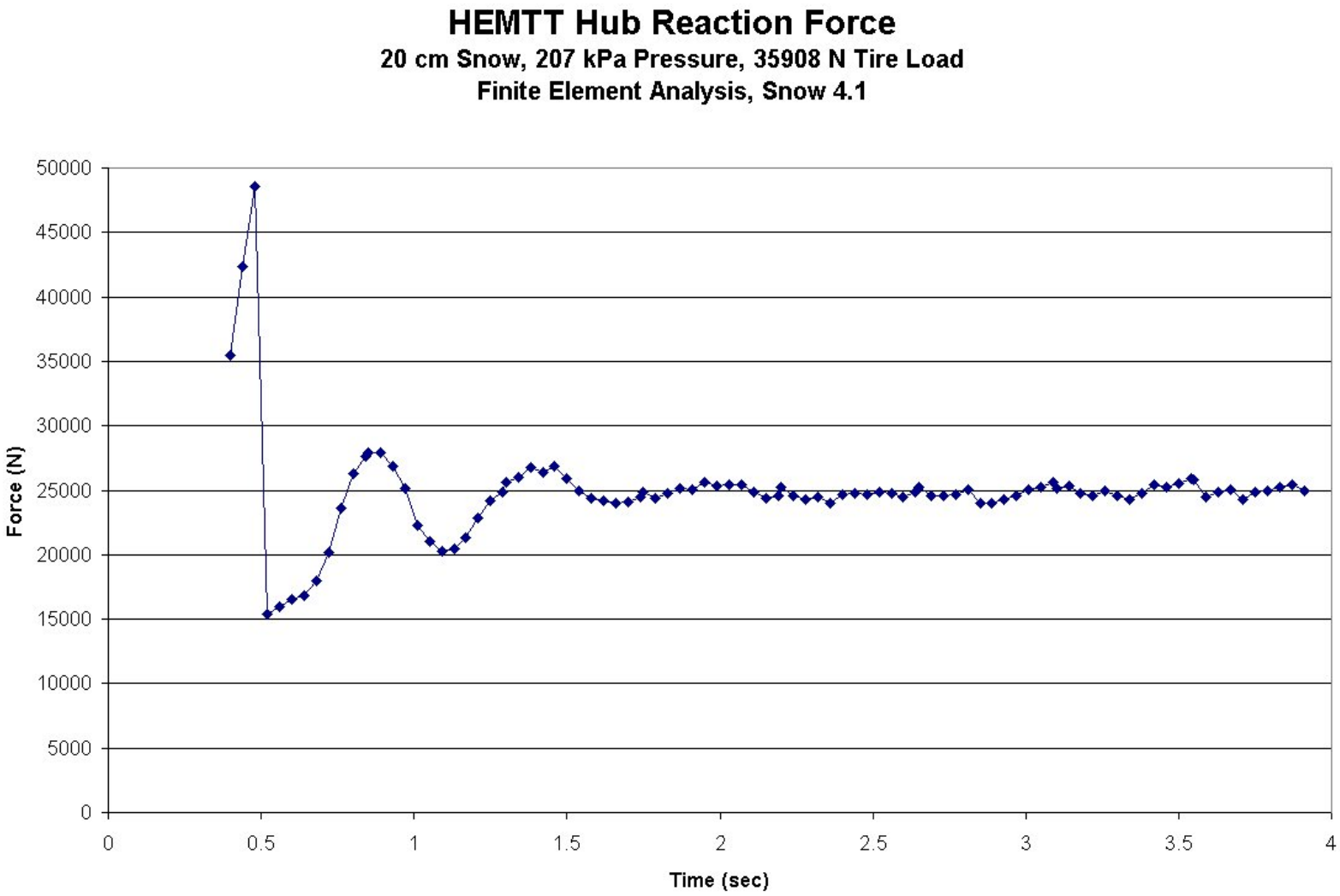

Measuring Snow Deformation

- Mark snow
  - Vehicle action
    - Excavate

Transverse

Longitude

Angle

Modeled Vs Measured Deformation

Longitudinal Cut

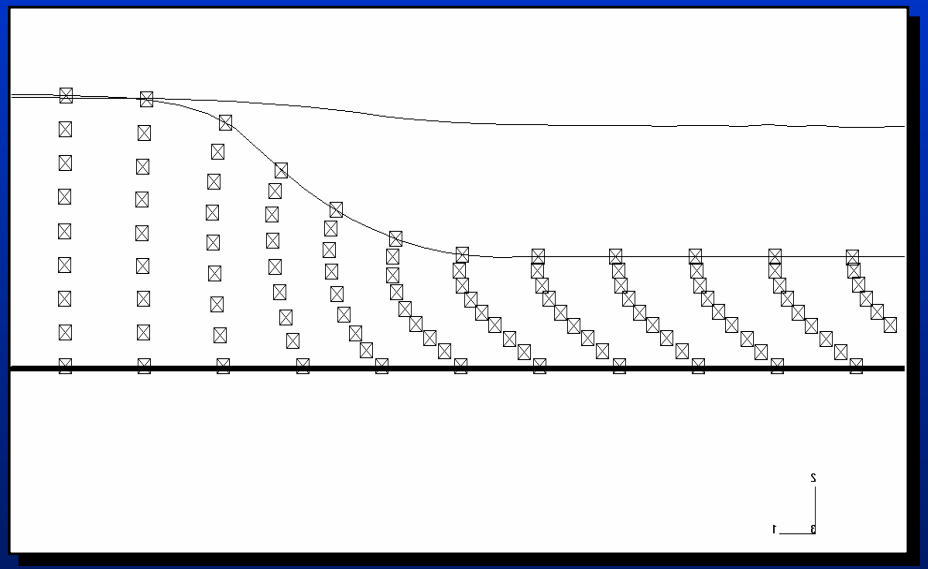

Modeled Vs Measured Deformation

Transverse Cut

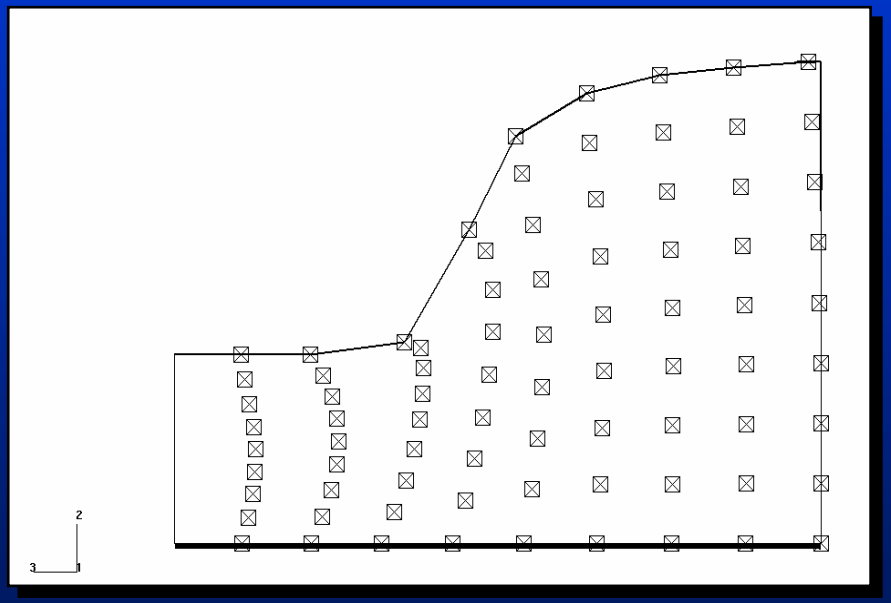

Comparing Measured Density to Model Values

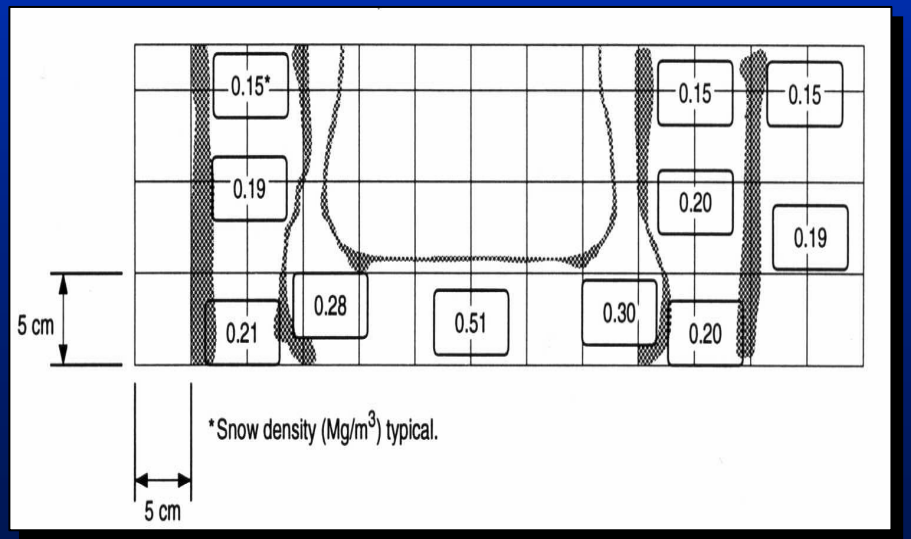

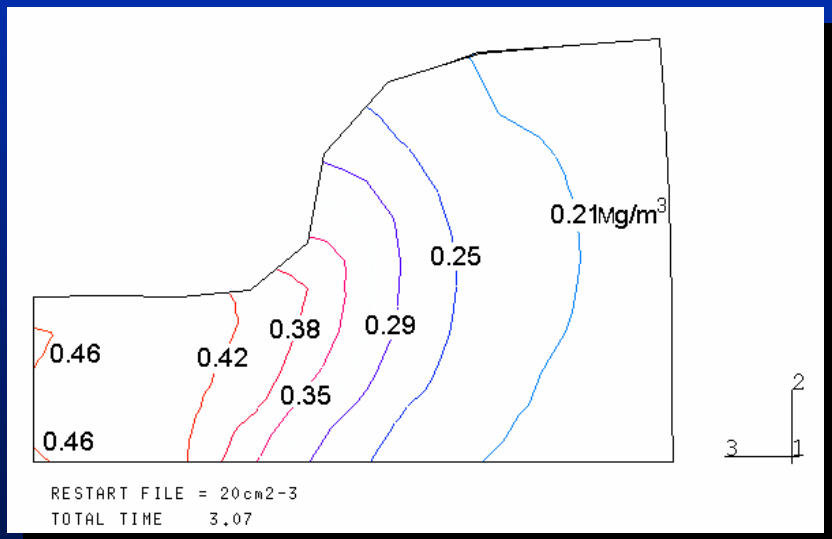

Motion Resistance (Jeep)

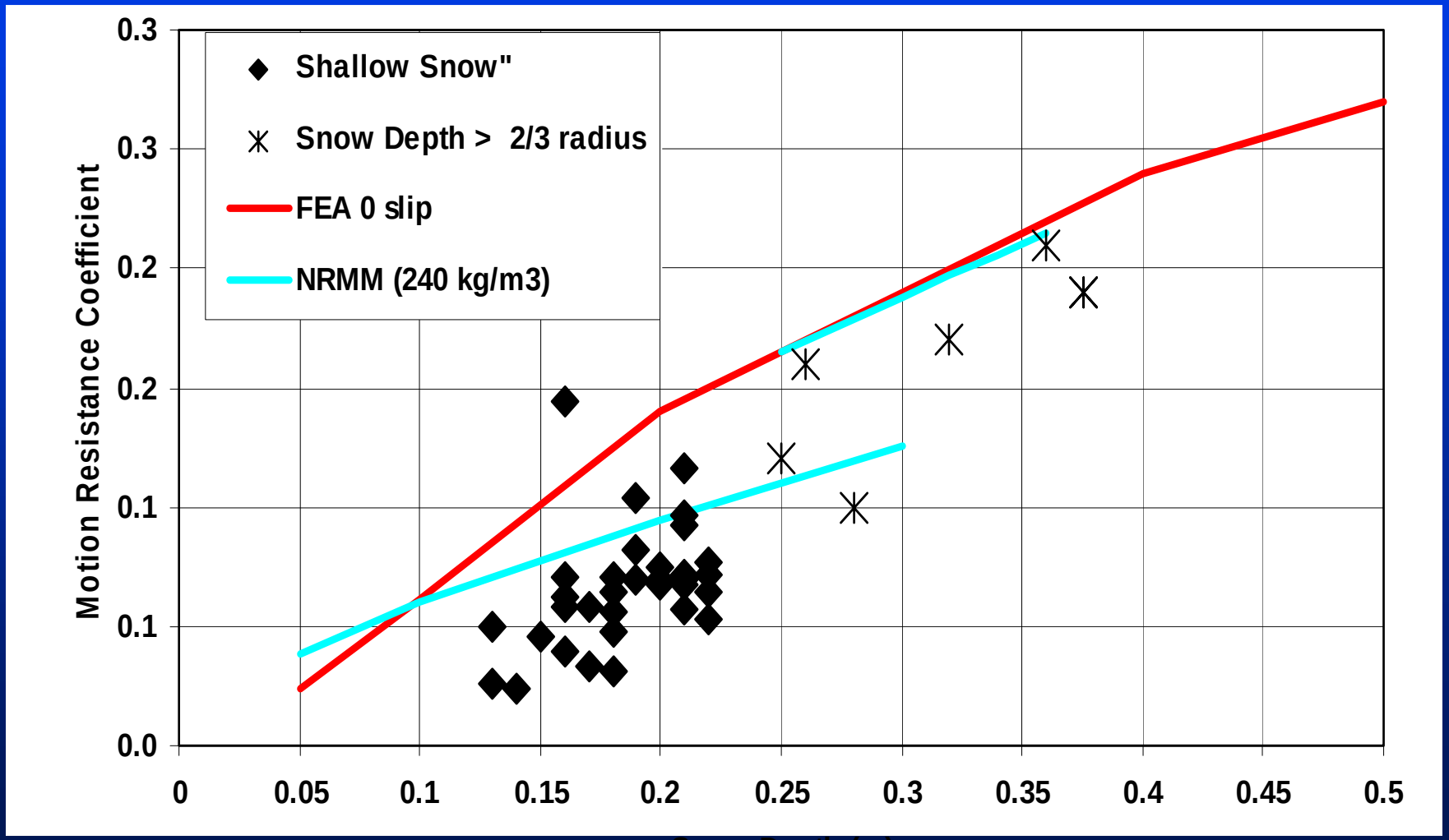

Jeep Wheel Sinkage

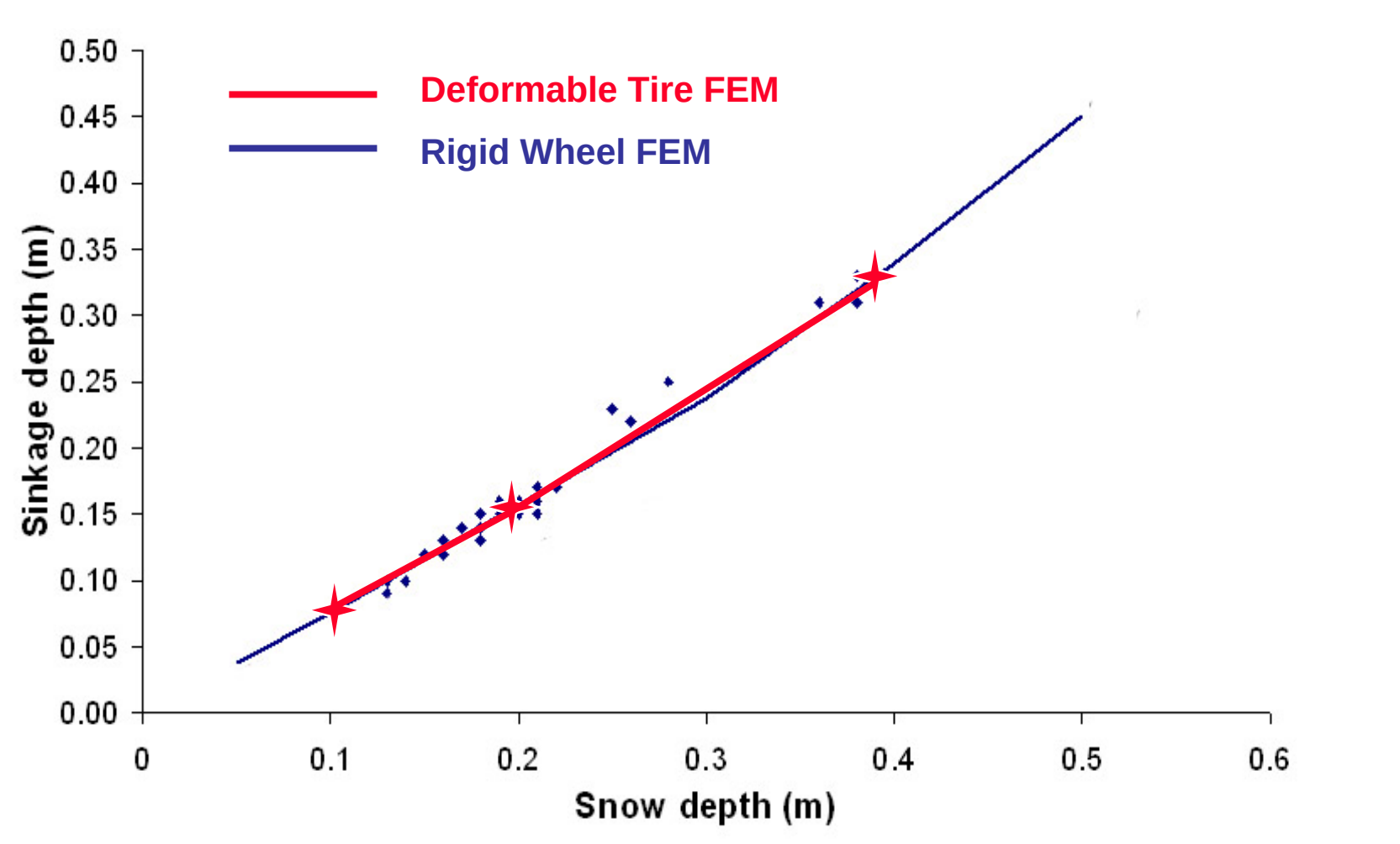

HMMWV Motion Resistance

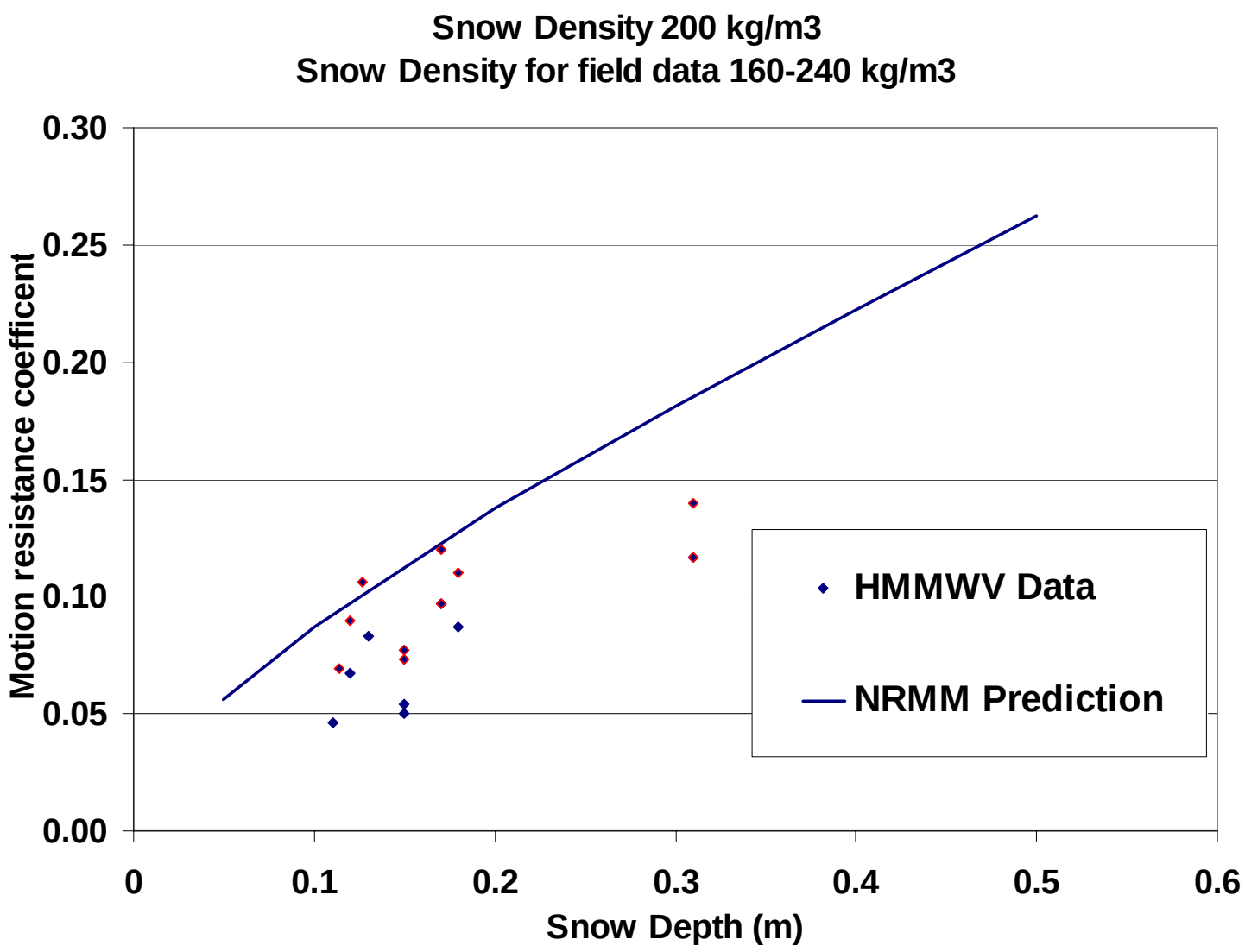

HMMWV Motion Resistance

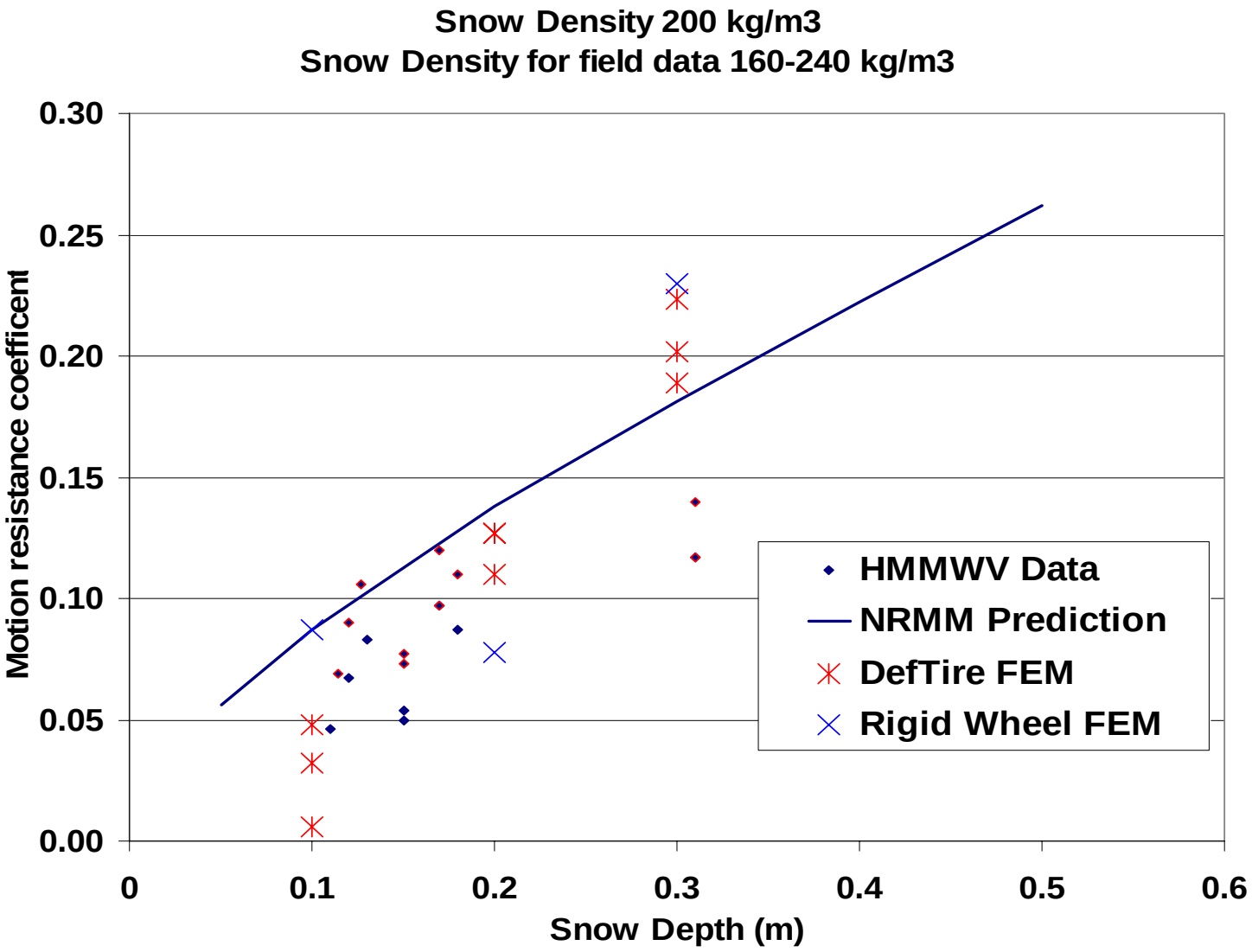

HMMWV Sinkage

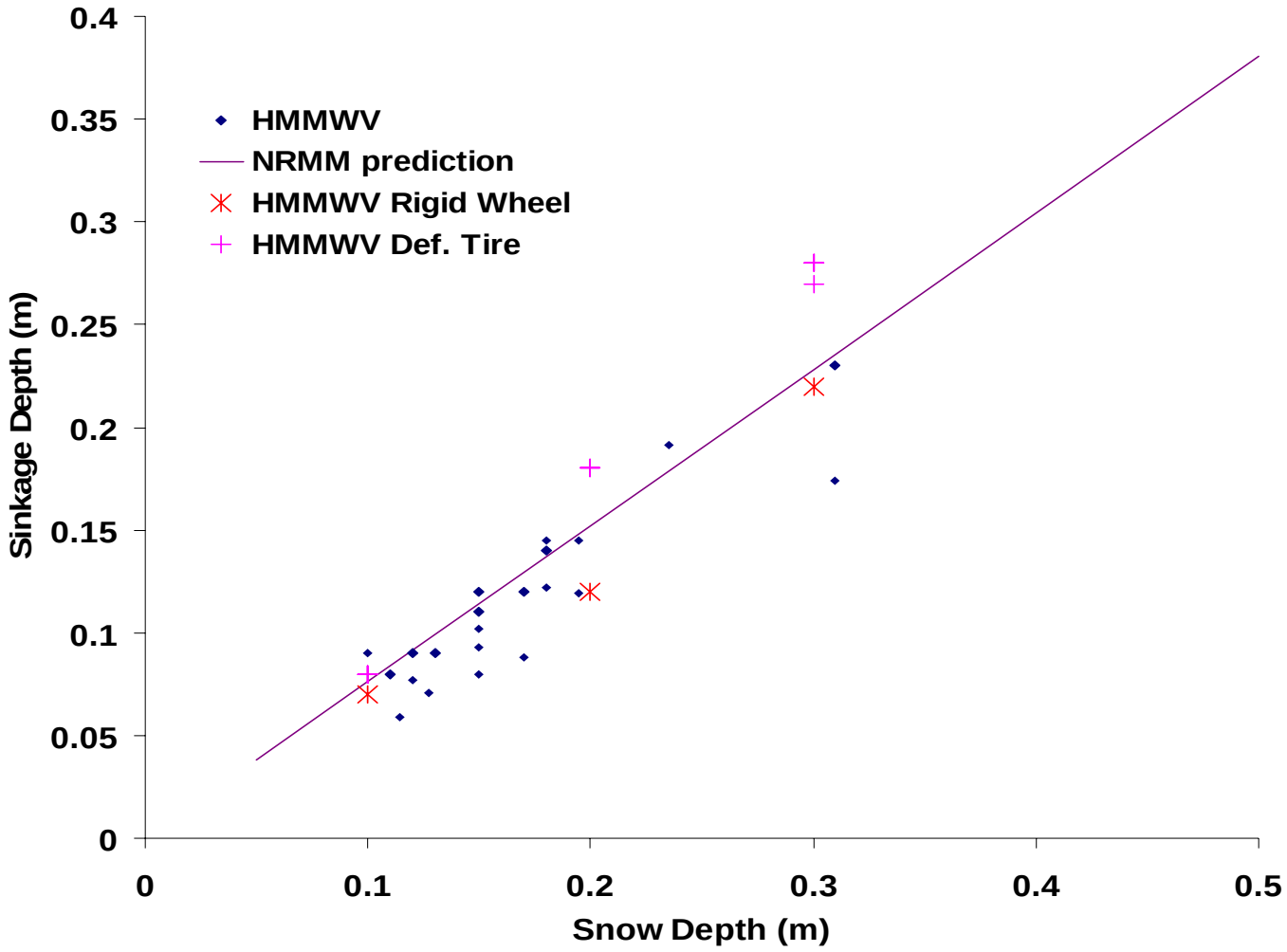

HEMTT Sinkage

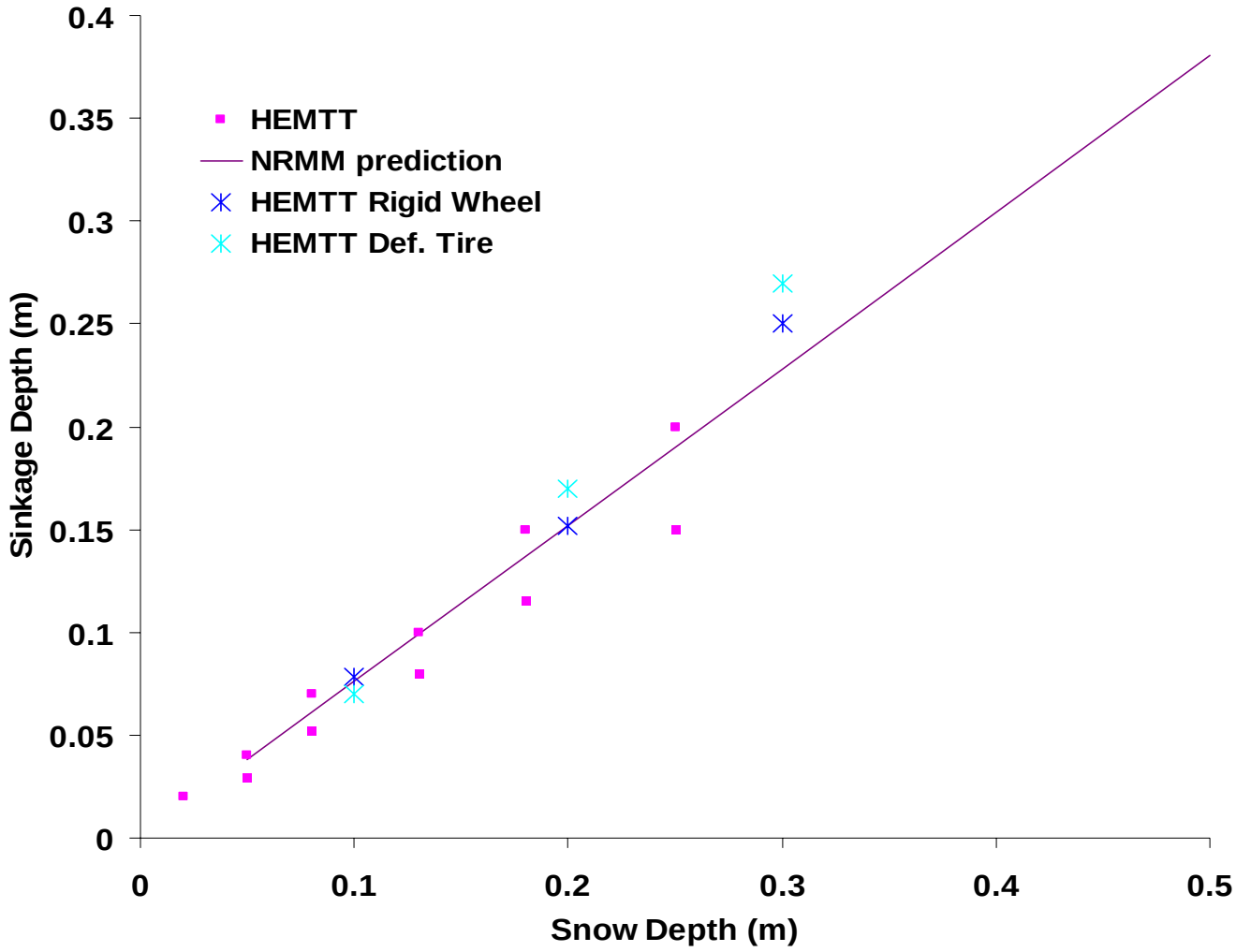

Summary and Conclusions

- Validated Material Model of Fresh Snow
- FEM Tires Rolling on Snow (compared with snow deformation, sinkage, and motion resistance forces)
- Scattered data but trend lines are mimicked by FEM
- Rigid wheel good assumption for shallow fresh snow
- Effects of deformable tire and inflation pressure small for steady state, but more important for dynamics

Other Applications
Rutting of unsurfaced roads

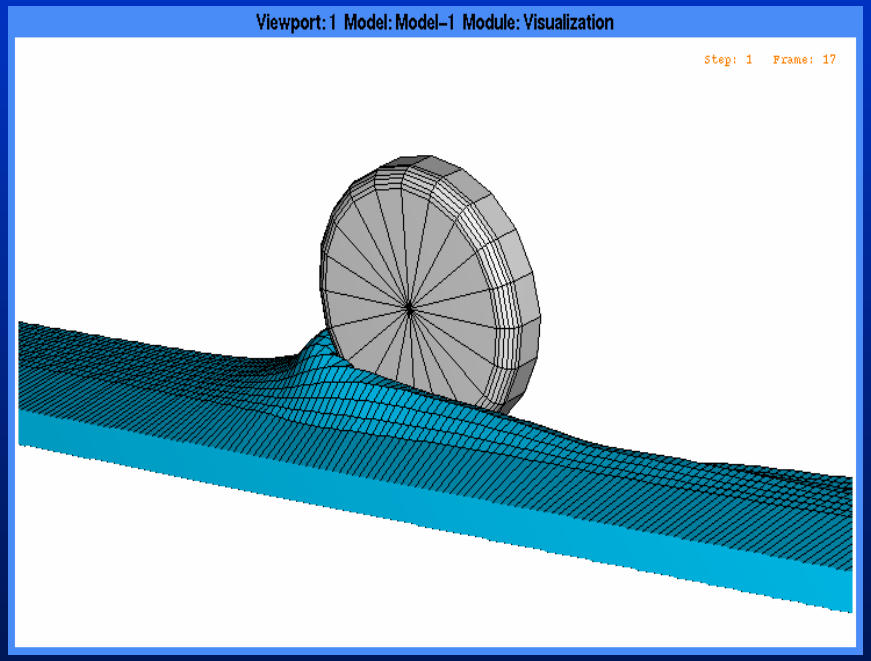

Application: Washboard Formation

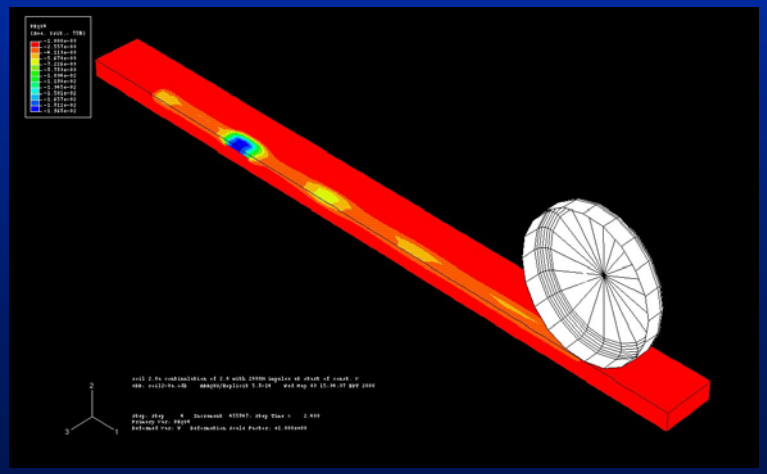

Application
Pavement Performance

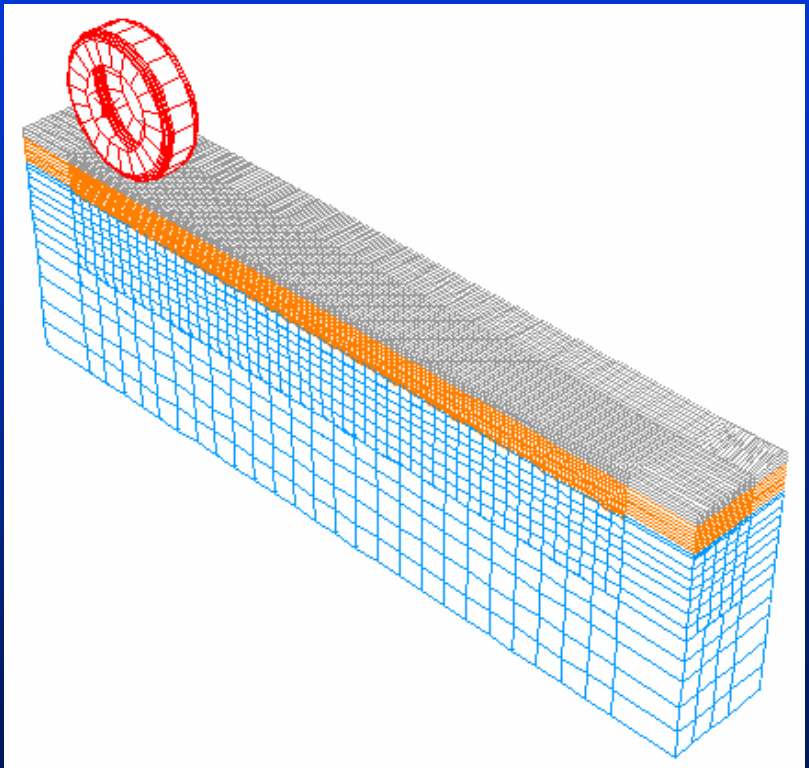

Future Work

- Slip angle and lateral traction testing and FEM

  (w/ NATC and UAF)

- Link vehicle dynamics and snow-tire FEM models

  (w/ MSC/ADAMS)

- Interface Friction & Tread Interlocking

  (variable friction law and submodeling)

- Layered pavement systems
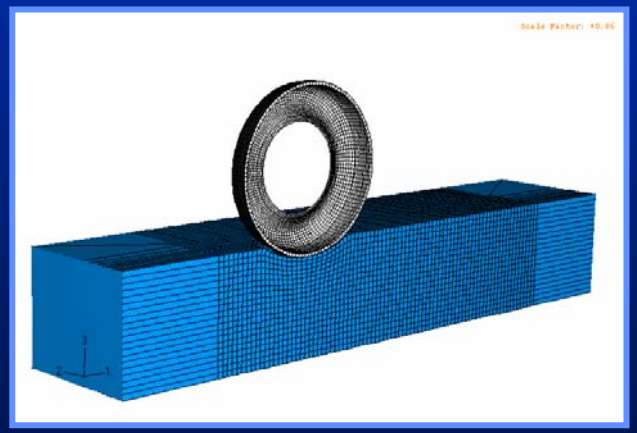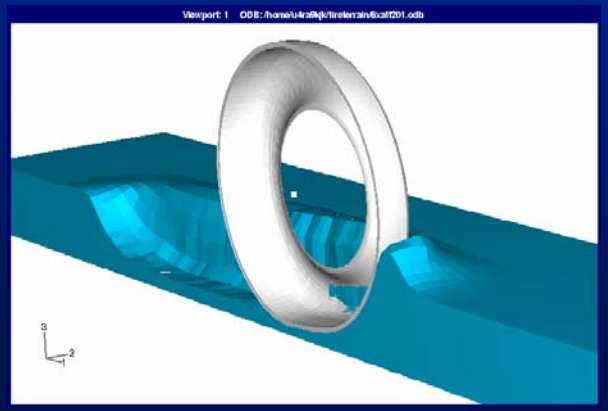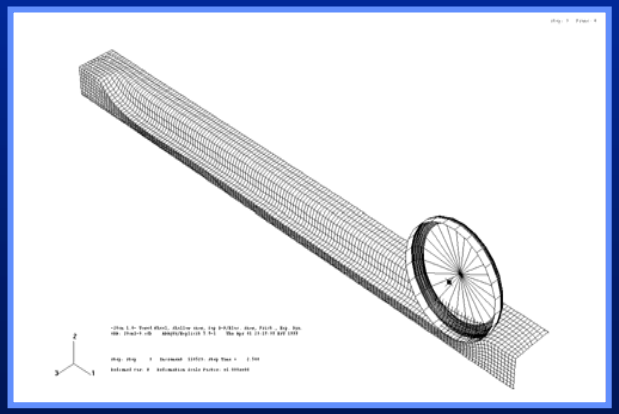
- Questions ? -